SANDBOX DOCUMENTATION

(ABDM_SCAN & SHARE)

Version 1.0

regCreated on 03.03.2025

1 Base URL and X-CM-ID 3

2 Terminology Definition: 3

3 Gateway 3

3.1 Overview 3

3.2 List of APIs 3

3.2.1 Auth token API 3

3.2.2 OpenID Configuration API 5

3.2.3 Keycloak Certificate API 6

3.2.4 Update bridge URL API 9

3.2.5 Registration of Facility & Software Linkage 10

3.2.6 Find bridge by service id 12

3.2.7 Find services by bridge id 14

4 Scan and Profile Share 16

4.1 Overview 16

4.2 Sequence Diagram 17

4.3 List of APIs 17

4.3.1 Profile share 17

4.3.2 Profile share – Callback 21

4.3.3 Profile on-share 25

4.3.4 Profile on share – Callback 27

4.4 Scan and Record Share 29

4.4.1 Overview 29

4.4.2 Sequence Diagram 30

4.4.3 Record share 30

4.4.4 Record share - Callback 33

4.4.5 Record on-share 36

4.4.6 Record on-share – Callback 38

4.5 Scan and Pay 41

4.5.1 Overview 41

4.5.2 Sequence Diagram 41
4.5.3 List of APIs 41
5 Error Codes Listing 53

1 Base URL and X-CM-ID

Environment	Base URL	X-CM-ID
Sandbox	https://dev.abdm.gov.in	Sbx
Production	https://apis.abdm.gov.in	Abdm

2 Terminology Definition:

Bridge ID: Is client ID which provided by NHA to HIP (Its alphanumerical eg: SBX_00XXXX)

Service ID: Is Facility ID which is generated from NHPR application (Its alphanumeric eg: IN02100000XX)

3 Gateway

3.1 Overview

This is the key ABDM building block that manages ABHA addresses, maintains links to health data for each ABHA address and manages consents provided by the user for sharing of their health data. It also supports exchange of interoperable health data between HIPs and HIUs. The HIE-CM enables exchange of personal health data with consent as per the Health Data Management Policy issued by NHA.

3.2 List of APIs

3.2.1 Auth token API

This API will be invoked to generate auth token.

URL: /api/hiecm/gateway/v3/sessions

Request: POST

Header Parameters:

Property Name	Example Value	Required	Description
REQUEST-ID	18235d89-cb13-479d-ad71-7a57d5f669a8	Yes	Unique UUID for tracking the end-toend request transaction
TIMESTAMP	2022-10-06T10:10:00.587Z	Yes	The actual time when the request was initiated, ISO Date time format represents the date and time

X-CM-ID	Sbx	Yes	Suffix of the consent manager to which the request was intended.

Body Parameters:

Property Name	Example Value	Required	Description
clientId	SBX_XXXXXX	Yes	Client id for authentication
clientSecret	"XXXXXXXXXXXXX"	Yes	Client secret for authentication
grantType	client_credentials	Yes	Grant type for authentication

Request Body:

Request Body

{
"clientId": "SBX_XXXXX",
"clientSecret": "XXXX-XXX-XXXX-XXXX-XXXXXXX",
"grantType": "client_credentials"
}

Response:

Response
Code : 202 Accepted

{

"accessToken":
"eyJhbGciOiJSUzI1NiIsInR5cCIgOiAiSldUIiwia2lkIiA6ICJBbFJiNVdDbThUbTlFSl9JZk85ejA2ajlvQ3Y1MXBLS
0ZrbkdiX1RCdkswIn0.eyJleHAiOjE3MjMyMjU3MTEsImlhdCI6MTcyMzIyNDUxMSwianRpIjoiMzE3MjVkN2Qt
NmM1Mi00OWE0LTk0M2MtZmY2ZjhkNjNhYmRlIiwiaXNzIjoiaHR0cHM6Ly9kZXYubmRobS5nb3YuaW4vYX
V0aC9yZWFsbXMvY2VudHJhbC1yZWdpc3RyeSIsImF1ZCI6ImFjY291bnQiLCJzdWIiOiJjN2NhMjk3Yi0yZTVh
LTRkN2UtOGY5YS0xYWU2NDAxYWQ0Y2YiLCJ0eXAiOiJCZWFyZXIiLCJhenAiOiJTQlhfMDAwMTM1Iiwic2Vzc
2lvbl9zdGF0ZSI6IjhiYjQ4ZGM5LTJmMDUtNDA0OC05MGUxLWRjYjgxNWRmOGU5MyIsImFjciI6IjEiLCJhbGx
vd2VkLW9yaWdpbnMiOlsiaHR0cDovL2xvY2FsaG9zdDo5MDA3Il0sInJlYWxtX2FjY2VzcyI6eyJyb2xlcyI6W
yJIaWRJbnRlZ3JhdGVkUHJvZ3JhbSIsIkhJVV9QQVlFUiIsImhmciIsImhpdSIsIm9mZmxpbmVfYWNjZXNzIi
wiaGVhbHRoSWQiLCJwaHIiLCJPSURDIiwiaGVhbHRoX2xvY2tlciIsImhpcCIsImhwX2lkIl19LCJyZXNvdXJjZV
9hY2Nlc3MiOnsiU0JYXzAwMDEzNSI6eyJyb2xlcyI6WyJ1bWFfcHJvdGVjdGlvbiJdfSwiYWNjb3VudCI6eyJy
b2xlcyI6WyJtYW5hZ2UtYWNjb3VudCIsIm1hbmFnZS1hY2NvdW50LWxpbmtzIiwidmlldy1wcm9maWxlIl19f
Swic2NvcGUiOiJvcGVuaWQgZW1haWwgcHJvZmlsZSIsImNsaWVudEhvc3QiOiIxMDAuNjUuMTYwLjIxNCI
sImNsaWVudElkIjoiU0JYXzAwMDEzNSIsImVtYWlsX3ZlcmlmaWVkIjpmYWxzZSwicHJlZmVycmVkX3VzZXJ
uYW1lIjoic2VydmljZS1hY2NvdW50LXNieF8wMDAxMzUiLCJjbGllbnRBZGRyZXNzIjoiMTAwLjY1LjE2MC4yMTQi
fQ.L56AYZYfzFrO_gNedAbSwR9foEO661z2cMGEeOKsz2ZXsIpTb9oLd9fmRiixIS7ToGoW2VzzXC14qrXnwZIqknBZchTRJrmyGk6iRJ
NQYR4k12hrn4tbdW- h5e9m4NWFAvPtGbBUyKA8gotrne9fn7T0MOC7N_J8TS3JLr2gothJSgc9P3VDKm8c6zpAObQPmwEpH
qJH6j2Q07nGsoaBygxovoIeFn6G6zwIa-_mKw_a86L_CYxr8Gxw5-
5PXkh2XwYp_xLIiJ3t7vLM97UFThwSn_TmRF6W1LH145m_6NxY4hQclHi1elK3OP4LvR1SLDwtAQZSCm4Jpihd0uMw",

"expiresIn": 1200,

"refreshExpiresIn": 1800,

"refreshToken":
"eyJhbGciOiJIUzI1NiIsInR5cCIgOiAiSldUIiwia2lkIiA6ICIyMWU5NzA4OS00ZTcxLTQyNGEtOTAzYS1jOTAyMW
M1NmFlNWYifQ.eyJleHAiOjE3MjMyMjYzMTEsImlhdCI6MTcyMzIyNDUxMSwianRpIjoiZGY5ODdmYzQtYzdk
Ni00OGNmLTliM2EtNzRmNWVkMTljMmNmIiwiaXNzIjoiaHR0cHM6Ly9kZXYubmRobS5nb3YuaW4vYXV0a
C9yZWFsbXMvY2VudHJhbC1yZWdpc3RyeSIsImF1ZCI6Imh0dHBzOi8vZGV2Lm5kaG0uZ292LmluL2F1dGg
vcmVhbG1zL2NlbnRyYWwtcmVnaXN0cnkiLCJzdWIiOiJjN2NhMjk3Yi0yZTVhLTRkN2UtOGY5YS0xYWU2ND
AxYWQ0Y2YiLCJ0eXAiOiJSZWZyZXNoIiwiYXpwIjoiU0JYXzAwMDEzNSIsInNlc3Npb25fc3RhdGUiOiI4YmI0O
GRjOS0yZjA1LTQwNDgtOTBlMS1kY2I4MTVkZjhlOTMiLCJzY29wZSI6Im9wZW5pZCBlbWFpbCBwcm9maWx
lIn0._cOnTXMf2bObS1nySL-AjvM5PQxgCHJRm2oO66nrx1M",

"tokenType": "bearer"

}

3.2.2 OpenID Configuration API

Openid-configuration API, defined within OpenID Connect which provides configuration information about the Identity Provider (IDP).

URL: /api/hiecm/gateway/v3/.well-known/openid-configuration
Request: GET
Header Parameters:

Property Name	Example Value	Required	Description
REQUEST-ID	18235d89-cb13-479d-ad71-7a57d5f669a8	Yes	Unique UUID for tracking the end-toend request transaction
TIMESTAMP	2022-10-06T10:10:00.587Z	Yes	The actual time when the request was initiated, ISO Date time format represents the date and time
X-CM-ID	Sbx	Yes	Suffix of the consent manager to which the request was intended.

Response

Response
Code : 202 OK

{
 	
"jwks_uri": "https://dev.abdm.gov.in/api/hiecm/gateway/v3/certs"
 	
}

3.2.3 Keycloak Certificate API

In response to open ID configuration API, Keycloak, the open-source identity provider, provides an OAuth certificate that can be used with open source authentication requests for certificates.

URL: /api/hiecm/gateway/v3/certs

Request: GET

Header Parameters:

Property Name	Example Value	Required	Description
REQUEST-ID	18235d89-cb13-479d-ad71-7a57d5f669a8	Yes	Unique UUID for tracking the end-toend request transaction
TIMESTAMP	2022-10-06T10:10:00.587Z	Yes	The actual time when the request was initiated, ISO Date time format represents the date and time
X-CM-ID	Sbx	Yes	Suffix of the consent manager to which the request was intended.

Response

Response
Code : 202 OK


```
{
  "keys": [
    {
      "e": "AQAB",
      "kid": "AlRb5WCm8Tm9EJ_IfO9z06j9oCv51pKKFknGb_TBvK0",
      "kty": "RSA",
      "n": "mgmW7W5ZGF_G5cJevwYi8HiPcI-6qS_psnZxa4v3bkwAkyOoOd8-6ketrOI-
ZA2PbRbGnxFfZHiI94rdFXJ4Q9ampscsz9NocTIPMPmWydJ8A50pZaYWyikYDSJiDltq7i3WspPKSOuQHrC
5h9dMcCVveX5oeg0tO68Z79gwDlpcxiqDbFaphsqDvx-
5XkfwiqvOBaybK6_BCBPuTqWMUEuUklLYXu2X7ESHdVNFMFAjxCcCXUtP7LFdvT3nnFekRmG82QbSQSVe
4N5tPH8q0MCxSWWn2c15bDnzOF-dvfRCVPRabCzw0M-utHR9diTrWtq6Koi5buxgwM1rbk0p8Q",
      "use": "sig",
      "x5c": [

"MIICrzCCAZcCBgFy/3WZBjANBgkqhkiG9w0BAQsFADAbMRkwFwYDVQQDDBBjZW50cmFsLXJlZ2lzdHJ5
MB4XDTIwMDYyOTA5NDEzNloXDTMwMDYyOTA5NDMxNlowGzEZMBcGA1UEAwwQY2VudHJhbC1yZWdpc
3RyeTCCASIwDQYJKoZIhvcNAQEBBQADggEPADCCAQoCggEBAJoJlu1uWRhfxuXCXr8GIvB4j3CPuqkv6b
J2cWuL925MAJMjqDnfPupHraziPmQNj20Wxp8RX2R4iPeK3RVyeEPWpqbHLM/TaHEyDzD5lsnSfAOdKWW
mFsopGA0iYg5bau4t1rKTykjrkB6wuYfXTHAlb3l+aHoNLTuvGe/YMA5aXMYqg2xWqYbKg78fuV5H8Iqrzg
WsmyuvwQgT7k6ljFBLlJJS2F7tl+xEh3VTRTBQI8QnAl1LT+yxXb0955xXpEZhvNkG0kElXuDebTx/KtDAsUllp9
```

nNeWw58zhfnb30QlT0Wmws8NDPrrR0fXYk61rauiqIuW7sYMDNa25NKfECAwEAATANBgkqhkiG9w0BAQs
FAAOCAQEACkC3TijrXIgi4vn+l1uL1nfdK6vOIL5UZ6yCjSOq7zYW6b3Qe8j7NrPb9RJC+pbIERyNbB+t9hsa5
g1L7lkjCNlUuxfJprsJ9LJKlM5g7dYEA6XPCJ7C6AVlarj72vlWXQvwjnQMO2/CM9/Jp5Hnv2Qwjn7NME2OW
M0iblc/TD+DEZK5L5mlWMyuBSQo2o/AcOmfG4MoE5Gm/CaOJ47rSrf+lq83e5+dyKh7uLVAa+5WK8Im
5nEs6BLSGyo2KlaV0mW9yCkoRLLbipjH8+rJwkUU6iu7QVjz0peGZzYldya5n35gMWH7Bu4HqFneKNRww
D6w8rGNC+uWtgWejDZ3yQ=="

],

"x5t": "EaMhYGUIvMkp8tvSM3QoaqaF8xM",

"x5t2": "vGer6Pt8AhZn8RlbHhAFksOCcGf3u1UWU7Qq-Doy7ro",

"alg": "RS256"

},

{

"e": "AQAB",

"kid": "oc-l6O1yJ7wJKYEeyeUafsz3Aecq7YnCIqbzbIfkJk8",

"kty": "RSA",

"n":
"jDOehgMzurNQT0WJCTWN6a34639uIKOLO1LnXZes_kTakWh6iRxmkExLLCD7MJjz9aijTHwIuKAtOCSbFO
pwbqSfF6dMBS2c8cv0AU3pE8kSMpGJKDZ9diA-BuUriwr9BUYSUW8SM68QH_HCaz2mmN_Z8ynTQ4kWw_Idj-
enVpkHYtq00DriG98l6RXF1Ao9Kd16ctoNbthuQYH0RSRIXnt0Qtm4GSAY7abPCNa64mir0auldU72DJHXwDo6g5OGz6E
Mm86ZAV_pvh_5YzFpfkUA8TK2LFVAmC3Up- IMxv0yMMKFZjkFGA0QKYMkMTC5ruLaE7cec-njA7dJQnQ",

"use": "sig",

"x5c": [

"MIICrzCCAZcCBgGHxvQVmDANBgkqhkiG9w0BAQsFADAbMRkwFwYDVQQDDBBjZW50cmFsLXJlZ2lzdHJ
5MB4XDTIzMDQyODA4MTk1N1oXDTMzMDQyODA4MjEzN1owGzEZMBcGA1UEAwwQY2VudHJhbC1yZWdpc
3RyeTCCASIwDQYJKoZIhvcNAQEBBQADggEPADCCAQoCggEBAIwznoYDM7qzUE9FiQk1jemt+Ot/biCjiztS
512XrP5E2pFoeokcZpBMSywg+zCY8/Woo0x8CLigLTgkmxTqcG6knxenTAUtnPHL9AFN6RPJEjKRiSg2fXYg
PgblK4sK/QVGElFvPkjOvEB/xwms9ppjf2fMp00OJFsPyHY/np1aZB2LatNA64hvfJekVxdQKPSndenLaDW7Y
bkGB9EUkSF57dELZuBkgGO2mzwjWuuJoq9PmrpXVPu9gyR18A6OoOThs+hDJvOmQFf6b4f+WMxaX5FA
PEytixVQJgt1KfiDMb9MjDChWY5BRgNECmDJDEwua7i2hO3HnPp4wO3SUJ0CAwEAATANBgkqhkiG9w0B
AQsFAAOCAQEABYAcXOSr+WgOxKVmygID9WjB4rDuAVDyU3GmjBvckdWhYJuBX8Vs04hNVNgf904gqy
+D5wZIQU985stK3PdogFGN2jVw2kO9G3hG4/7uwYKqciKApT/pSPMeHRltHGp/Mwr6e5poVwgQyrn+Be
H373U1Q6eB1QUYnElP+16y7bbvQhfDAS2X9sqdfurB9YIL5xZMPddZaf7pPX8oWOVlB0XH1JEZfsX125qq0Xn
K8z/Rd8KI8zTfJw6D2Kzrk1WvQSlM5KnTQmcSk3kwDlW5Dg657dT49Y68mI4azq34q17JgBhTx3IbTuf94QT
w7QC5wmFtO+hc6zPVODX8JWu7sQ=="

```
        ],

        "x5t": "-HZ-fkkNBhTsPHWrhATwlZflhdU",

        "x5t2": "tjVDNCTx7Fn0TfM-6uHvbwjWlIxIaFtGxiZZ6uJFxr4",

        "alg": "RS512"

      }

  ]

}
```


3.2.4 Update bridge URL API

This API will be called to update the bridge base URL.

URL: /api/hiecm/gateway/v3/bridge/url
Request: PATCH
Header Parameters:

Property Name	Example Value	Required	Description
Authorization	eyJhbGciOiJSUzUxMiJ9.eyJzdWIiOiJ2YXNhbnRoYWt1bWFyLmtlc2F2YW5Ac2J4IiwiY2xpZW50SWQiOiJzYngiLCJzeXN0ZW0iOiJBQkhBLUEiLCJyZXF1ZXN0ZXJJZCI6IlBlUi1XRUIiLCJwaHJNb2JpbGUiOm51bGws	Yes	JWT Access token which was issued by ABDM session API after successful validation of client id and secret.
REQUEST-ID	18235d89-cb13-479dad71-7a57d5f669a8	Yes	Unique UUID for tracking the end-to-end request transaction
TIMESTAMP	2022-10-06T10:10:00.587Z	Yes	The actual time when the request was initiated, ISO Date time format represents the date and time
X-CM-ID	sbx	Yes	Suffix of the consent manager to which the request was intended.

Body Parameters:

Property Name	Example Value	Required	Description
url	https://webhook.site/b7 99c0b8-4e75-4545- 8eb2-d8c2d5f0c9f6	Yes	Bridge base URL

Request Body:

Request Body
{ "url": "https://webhook.site/b799c0b8-4e75-4545-8eb2-d8c2d5f0c9f6" }

Response:

Response
Code : 202 Accepted

3.2.5 Registration of Facility & Software Linkage

Overview: The software being used by the provider must integrate with the digital building blocks of ABDM and comply with the guidelines outlined NHA. NHA maintains the national directory of all healthcare facilities. Any participating facility needs to sign up in the health facility registry at (nhpr.abdm.gov.in) This ensures that they are a valid facility which is authorized to issue health records in the ecosystem. HFR consists of information for each healthcare facility in the country – hospitals, clinics, diagnostic centers, pharmacies etc., across all systems of medicine and covering both public and private health facilities. HFR offers APIs that can be used by various stakeholders in the ecosystem. Healthcare information service provider application or healthcare repository provider application must be upgraded to become ABDM compliant.

Registration of facility:

Through website: https://hspsbx.abdm.gov.in/home (sandbox) , https://nhpr.abdm.gov.in/home (production) **Step-by-step user manual document access:**

Goto: https://hspsbx.abdm.gov.in/home (sandbox) , https://nhpr.abdm.gov.in/home (production) >>Resource center >> User Manual

>> Select “For Health Fecility” >>Download “User Manual” >>Refer Content

"A" (Health Professional ID (HPID) creation), "B" (Facility Registration) **Registration of bridge services (HIP/HIU) on facility:**

Option 1: Linking through website: https://hspsbx.abdm.gov.in/home (sandbox) , https://nhpr.abdm.gov.in/home (production) **Step-by-step user manual document access:** Goto: https://hspsbx.abdm.gov.in/home (sandbox) , https://nhpr.abdm.gov.in/home (production) >>Resource center >> User Manual >> Select "For Health Facility" >>Download "User Manual" >>Refer Content "C" (Software Linkage).

Option 2: Through API This API (https://facilitysbx.abdm.gov.in/v1/bridges/MutipleHRPAddUpdateServi ces) will be used to link multiple bridges against a facility. It will accept the facility id , facility name and list of HRP i.e. bridges.

Please note:

- You must pass in all the required parameters to create the API.
- The data needs to be passed in the required format as mentioned for each field. **API can refer swagger link :**

https://facilitysbx.abdm.gov.in/swaggerui.html#/Multiple_HRP_API >>>Go to Multi HRP API >>>and Select

"/v1/bridges/MutipleHRPAddUpdateServices v1MutipleHRPAddUpdateServices"

Parameters:

Params	Required	Description	Data type	Format if any
facilityId	Yes	Will be validated if present in HFR or not	String	Starting with IN and of 12 characters
facilityName	Yes	Name of the facility to be linked	String	Alphanumeric
bridgeId	Yes	Valid Bridge Id to be linked.	String	Alphanumeric and validity to be checked by HIECM

hipName	Yes	• To provide uniqueness against each bridges that is linked . HIP name is the	String	• HIP name can be the Hospital name added
bridgeName		name of the hospital which will reflect		with suffix of bridge name. example
		on ABHA/PHR app when the patent will search for the respective hospital.		Hospital name=XYZ and bridge name =BRIDGE TEST, so the HIP name = XYZ BRIDGE. • HIP name can not be more than 15 characters., No special character is allowed (%$*#@(~&!), and it should be unique for every bridge for a facility
type	Yes	HIP / HIU etc	String	Validated by HIECM
Active	Yes	True/false	boolean	Accept Boolean value

3.2.6 Find bridge by service id

This API will fetch the bridge details for the given service id.

URL: /api/hiecm/gateway/v3/bridge-service/serviceId/{serviceId}

Request: GET

Header Parameters:

Property Name	Example Value	Required	Description
Authorization	eyJhbGciOiJSUzUxMiJ9.eyJzdWIiOiJ2YXNhbnRoYWt1bWFyLmtlc2F2YW5Ac2J4IiwiY2xpZW50SWQiOiJzYngiLCJzeXN0ZW0iOiJBQkhBLUEiLCJyZXF1ZXN0ZXJJZCI6IlBIUi1XRUIiLCJwaHJNb2JpbGUiOm51bGwsImV4cCI6MTY2NzI5ODExNSwiaWF0IjoxNjY3MjkwOTE1LCJwaHJBZGRyZXNzIjoidmFzYW50aGFrdW1hci5rZXNhdmFuQHNieCIsInR4bklkIjoiYjEwMGM4ZDMtNTE1ZC00YWFiLTg1OWQtYzNlMTUwOTE3ZGY1In0	Yes	JWT Access token which was issued by ABDM session API after successful validation of client id and secret.
REQUEST-ID	18235d89-cb13-479dad71-7a57d5f669a8	Yes	Unique UUID for tracking the end-to-end request transaction
TIMESTAMP	2022-10-06T10:10:00.587Z	Yes	The actual time when the request was initiated, ISO Date time format represents the date and time
X-CM-ID	sbx	Yes	Suffix of the consent manager to which the request was intended.

Response:

Response
Code : 200 Ok
{ "id": 1561, "bridgeId": "SBX_XXXX", "serviceId": "TestClinicHIP", "name": "TestClinicHIP", "isHip": true, "isHiu": true, "isPhr": false, "endpoints": {}, "active": true, "registerTime": "2021-03-01 11:17:35.1735", "dateCreated": "2021-03-01 11:17:35.1735",

```
  "dateModified": "2024-04-22 11:04:46.446"
}
```

3.2.7 Find services by bridge id

This API will fetch all the service ID details linked with the respective bridge id.

URL: /api/hiecm/gateway/v3/bridge-services
Request: GET
Header Parameters:

Property Name	Example Value	Required	Description
Authorization	eyJhbGciOiJSUzUxMiJ9.eyJzdWIiOiJ2YXNhbnRoYWt1bWFyLmtlc2F2YW5Ac2J4IiwiY2xpZW50SWQiOiJzYngiLCJzeXN0ZW0iOiJBQkhBLUEiLCJyZXF1ZXN0ZXJJZCI6IlBIUi1XRUIiLCJwaHJNb2JpbGUiOm	Yes	JWT Access token which was issued by ABDM session API after successful validation of client id and secret.
REQUEST-ID	18235d89-cb13-479dad71-7a57d5f669a8	Yes	Unique UUID for tracking the end-to-end request transaction
TIMESTAMP	2022-10-06T10:10:00.587Z	Yes	The actual time when the request was initiated, ISO Date time format represents the date and time
X-CM-ID	sbx	Yes	Suffix of the consent manager to which the request was intended.

Response:

Response
Code : 200 Ok

{
"bridge": {
"id": "SBX_XXXX",
"name": "Testing",
"url": "https://abdcb.doctor9.com",
"active": true,
"blocklisted": false
},
"services": [

```
    {
      "id": "@#$%^&*(",
      "name": "hello",
      "types": [
        "HIP",
        "HIU"
      ],
      "endpoints": {
        "hipEndpoints": [
          {
            "use": "registration",
            "connectionType": "HTTPS",
            "address":
"https://events.hookdeck.com/e/src_3gsnEgI941mh/registration"


          },
          {
            "use": "data-upload",
            "connectionType": "HTTPS",
            "address":
"https://events.hookdeck.com/e/src_3gsnEgI941mh/data-
upload"
          }
        ],
        "hiuEndpoints": [
          {
            "use": "registration",
            "connectionType": "HTTPS",
            "address":
"https://events.hookdeck.com/e/src_3gsnEgI941mh/registration"
          },
          {
            "use": "data-upload",
            "connectionType": "HTTPS",
            "address":
"https://events.hookdeck.com/e/src_3gsnEgI941mh/data-
upload"
          }
        ],
        "healthLockerEndpoints": [
          {
            "use": "registration",
            "connectionType": "HTTPS",
            "address":
"https://events.hookdeck.com/e/src_3gsnEgI941mh/registration"
          },
          {
            "use": "data-upload",
            "connectionType": "HTTPS",
            "address":
"https://events.hookdeck.com/e/src_3gsnEgI941mh/data-
upload"
          }
        ]
      },
      "active": true
    }
```

```
  ]
}
```

4 Scan and Profile Share

4.1 Overview

The User/Patient can share his/her basic KYC information with the HMIS/LIMS by scanning the QR Code using the integrator application (Example: ABHA App), which enables them to complete the seamless profile share during their visit.

The authenticity of the profile information is verified by the HIE-CM internally before sharing with the HMIS/LIMS.

The content of the QR code is a URL (sample for reference: https://phrsbx.abdm.gov.in/share-profile?hipid=IN3410000260&counterid=12345) that contains 2 parameters:

- The HIP ID
- Facility defined context (for example: counter code)

4.2 Sequence Diagram

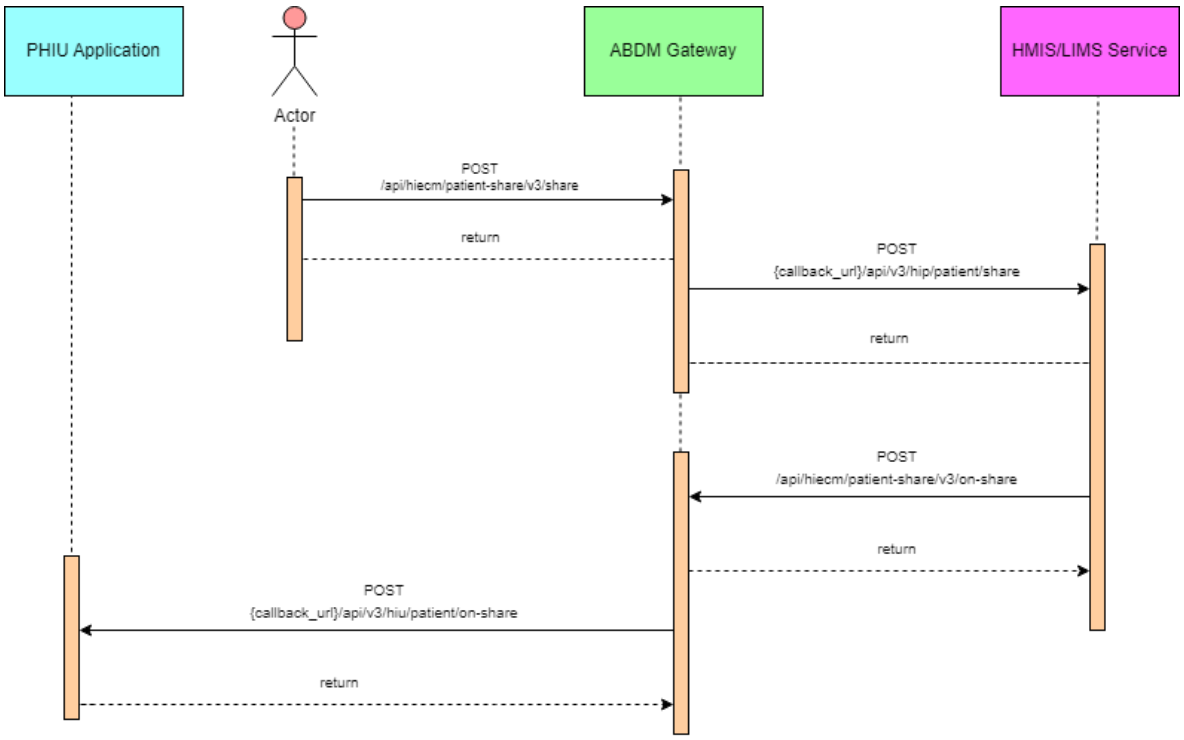

ABDM - HIE-CM - Patient Share Sequence Diagram

4.3 List of APIs

4.3.1 Profile share

This API will be invoked from the integrator application (any PHR application, just like ABHA) to share the user/patient profile with HMIS/LIMS.

URL: /api/hiecm/patient-share/v3/share

Method: POST

Request Headers:

Property Name	Example Value	Required	Description
REQUEST-ID	18235d89-cb13-479d-ad71-7a57d5f669a8	Yes	Unique UUID for track the end to end request transaction

TIMESTAMP	2022-10-06T10:10:00.587Z	Yes	Actual time when request was initiated, ISO Date time format represents date and time
Authorization	eyJhbGciOiJSUzUxMiJ9. eyJzdWIiOiJ2YXNhbnRoYWt1bWFyLmtlc 2F2 YW5Ac2J4IiwiY2xpZW50SWQiOiJz YngiLCJzeXN0ZW0iOiJBQkhBLUEiLCJy ZXF1ZXN0ZXJJZCI6IlBIUi1XRUIiL CJwaHJNb2JpbGUiOm51bGwsImV4c CI6MTY2NzI5ODExNSwia WF0IjoxNjY3MjkwOTE1LCJwaHJBZ GRyZXNzIjoidmFzYW50aGFrdW1hci5rZX NhdmFuQHNieCIsInR4bklkIjoi YjEwMGM4ZDMtNTE1ZC00YWFiLTg1O WQtYzNlMTUwOTE3ZGY1In0	Yes	JWT Access token which was issued by ABDM session API after successful validation of client id and secret
X-HIU-ID	IN2810014366	Yes	Identifier of the health information user to which the request was intended
X-CM-ID	sbx	Yes	Suffix of the consent manager to which the request was intended
X-AUTH-TOKEN	eyJhbGciOiJSUzUxMiJ9.eyJzdWIiOiJna XJpamFAc2J4IiwiY2xpZW50SWQiOiJQS FItV0VCIiwicmVxdWVzdGVySWQiOiJrX 2hpcCIsInN5c3RlbSI6IkFCRE0iLCJtb2Jp bGUiOiI4MjgxMTQ3MDgwIiwiZXhwIjoxNj c3NjY5NDU1LCJpYXQiOjE2Nzc2NjIyNTUs InRyYW5zYWN0aW9uSWQiOiJkMmY5O TNkNi1kODg4LTQyMTMtOTc3My0wYmJj MzMwMjVhNGYiLCJhYmhhQWRkcmVzc yI6Imdpcmlq YUBzYngifQ.Ad_jGrduH6 _krBBnlRO912mQabxMOiB0GN6FjdZjoi CQY4AkUD3McGq2NR-X- GAjHVpkRtKx69m4_44h-	Yes	JWT Access token which was issued by IDP service after successfully user authenticatio n

	FqTCbZlo09hq0SEM1KBMkPDl163JcFNM JGnXBa5E-mu6DpBSPA-VirSvBVj6CEpZLbTa2nBBSJJi_leszwHNr kdope6rSc2G3SJfCW_DzFmzd_fxdvbFCN1yyhN3Rw5r8A1GnSrVSBhRjm4qy5O _ gutl1XW9CaBaZSah7GOxGRr4gpSIJJvIL WovwG58DyNzEhrHtAfIje_pegqRsNMO FI-xPYJd2x6CcDKSoAXvXO0jbuoOvlPl5kh plOKU-WcFeWA		

Body Parameters:

Property Name	Example Value	Require d	Description
intent	"PROFILE_SHARE"	Yes	This is a key value pair which contains the purpose with following possible values. Profile_share Payment Health_record_sharing
metaData	{ "hipId": "Test_HIP", "context": "ABC123", "hprId": "abdulkalam@abdm", "latitude": "-38.679", "longitude": "58.498" }	Yes	This is a key value pair which contains the location longitude and latitude. hipId:- healthInformationProviderId context:- counterCode hprId:- healthprofessionalregisterId

profile	{
	"patient": {
	"abhaNumber": 18443810806111,
	"abhaAddress": "1844381@abdm",
	"name": "User 1",
	"gender": "M",
	"dayOfBirth": "20",
	"monthOfBirth": "1",
	"yearOfBirth": "1999",
	"address": { "line": "C/O Sandipan Kshirsagar Ambejogai Road Renuka Nagar Latur",
	"district": **null**,
	"state": **null**,
	"pincode": **null** ,
	}
	"phoneNumber": "9876543210"
	}
	}
		Yes	This is key value pair which contains patient details

Request Body

Request Body:

```
{
  "intent": "PROFILE_SHARE",
  "metaData": {
    "hipId": "MAYUR_HIP",
    "context": "ABC123",
    "hprId": "abdulkalam@abdm",
    "latitude": "-38.679",
    "longitude": "58.498"
  },
  "profile": {
    "patient": {
      "abhaNumber": 91178386101251,
      "abhaAddress": "9117838@sbx",
      "name": "User 1",
      "gender": "M",
      "dayOfBirth": "10",
      "monthOfBirth": "10",
      "yearOfBirth": "1994",
      "address": {
        "line": "C/O Sandipan Kshirsagar Ambejogai Road Renuka Nagar",
        "district": null,
        "state": null,
        "pincode": null
      },
      "phoneNumber": "9876543210"
    }
  }
}
```


Response

Response:
Code: 202 ACCEPTED

4.3.2 Profile share – Callback

This is a callback API for patient share API.

URL: {callback_url}/api/v3/hip/patient/share

Method: Post

Request Headers:

Property Name	Example Value	Required	Description

REQUEST-ID	18235d89-cb13-479d-ad717a57d5f669a8	Yes	Unique UUID for track the end to end request transaction
TIMESTAMP	2022-10-06T10:10:00.587Z	Yes	Actual time when request was initiated, ISO 8601 represents date and time by starting with the year, followed by the month, the day, the hour, the minutes, seconds and milliseconds
X-HIP-ID	IN2810014366	Yes	Identifier of the health information provider to which the request was intended

Body parameters

Property Name	Example Value	Required	Description
intent	PROFILE_SHARE	Yes	This is a key value pair which contains the purpose with following possible values. Profile_share Payment Health_record_sharing

metaData	"metaData": {
	"hipId": "MAYUR_HIP", "context": "ABC123", "hprId": "abdulkalam@abdm",
	"latitude": "-38.679",
	"longitude": "58.498"
	}
		Yes	This is a key value pair which contains the location longitude and latitude.
			hipId:- healthInformationProviderId
			context:- counterCode
			hprId:- healthprofessionalregisterId

profile	"profile": {
	"patient": {
	"abhaNumber": 91178386176531,
		Yes	This is key value pair which contains all the patient details

	"abhaAddress": "91178386@sbx",
	"name": "User 1",
	"gender": "M",
	"dayOfBirth": "10",
	"monthOfBirth": "10",
	"yearOfBirth": "1994",
	"address": {
	"line": "C/O Sandipan Kshirsagar Ambejogai Road",
	"district": **null**,
	"state": **null**,
	"pincode": **null**
	},
	"phoneNumber": "9876543210"
	}		

Request Body

Request Body:

```
{
  "intent": "PROFILE_SHARE",
  "metaData": {
    "hipId": "MAYUR_HIP",
    "context": "ABC123",
    "hprId": "abdulkalam@abdm",
    "latitude": "-38.679",
    "longitude": "58.498"
  },
  "profile": {
    "patient": {
      "abhaNumber": 9117838615XXXX,
      "abhaAddress": "91178XXXX@sbx",
      "name": "User 1",
      "gender": "M",
      "dayOfBirth": "XX",
      "monthOfBirth": "XX",
      "yearOfBirth": "XXXX",
      "address": {
        "line": "C/O Sandipan Kshirsagar Ambejogai Road Renuka Nagar",
        "district": null,
        "state": null,
        "pincode": null
      },
      "phoneNumber": "987654XXXX"
    }
  } }
```


Response

Response:
Response: In call back url below details should be displayed as per the Xauth token {"intent":"PROFILE_SHARE","metaData":{"hipId":"MAYUR_HIP","context":"6","hprId":"abdulkalam@hpr.abdm","latitude":"-38.670","longitude":"58.498"},"profile":{"patient":{"abhaNumber":"91178386156891","abhaAddress":"911783XX@sbx","name":"User 1", "gender":"M","dayOfBirth":"XX","monthOfBirth":"XX","yearOfBirth":"XXXX","address":{"line":null,"district":null,"state":null,"pincode":null},"phoneNumber":"987654XXXX"}}}
Code: 200 OK

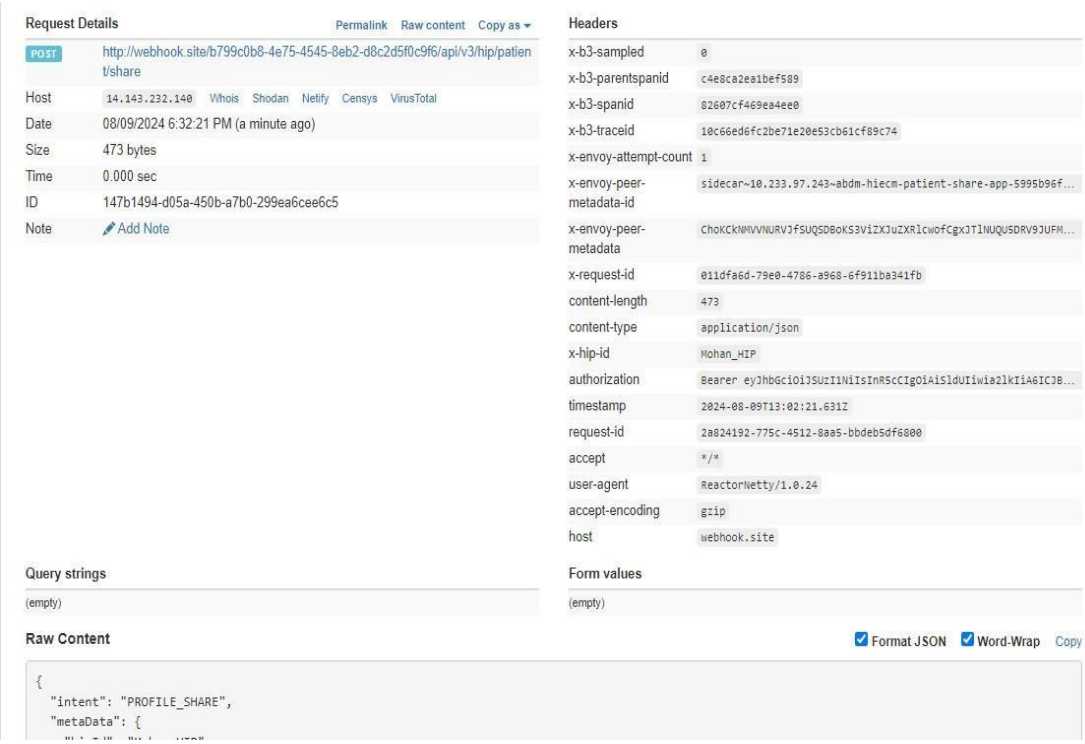

Request Details

Permalink Raw content Copy as

POST http://webhook.site/b799c0b8-4e75-4545-8eb2-d8c2d5f0c9f6/api/v3/hip/patient/share

Host 14.143.232.140 Whois Shodan Netify Censys VirusTotal

Date 08/09/2024 6:32:21 PM (a minute ago)

Size 473 bytes

Time 0.000 sec

ID 147b1494-d05a-450b-a7b0-299ea6cee6c5

Note Add Note

Headers

x-b3-sampled	0
x-b3-parentspanid	c4e8ca2ea1bef589
x-b3-spanid	82607cf469ea4ee0
x-b3-traceid	10c66ed6fc2be71e20e53cb61cf89c74
x-envoy-attempt-count	1
x-envoy-peer-metadata-id	sidecar~10.233.97.243~abdm-hiecm-patient-share-app-5995b96f...
x-envoy-peer-metadata	ChoKCkNMVVNURVJfSUQSDBoKS3ViZXJuZXRlcwofCgxJTlNUQU5DRV9JUFM...
x-request-id	011dfa6d-79e0-4786-a968-6f911ba341fb
content-length	473
content-type	application/json
x-hip-id	Mohan_HIP
authorization	Bearer eyJhbGciOiJSUzI1NiIsInR5cCIgOiAiSldUIiwia2lkIiA6ICJB...
timestamp	2024-08-09T13:02:21.631Z
request-id	2a824192-775c-4512-8aa5-bbdeb5df6800
accept	*/*
user-agent	ReactorNetty/1.0.24
accept-encoding	gzip
host	webhook.site

Query strings

(empty)

Form values

(empty)

Raw Content

Format JSON Word-Wrap Copy

```
{
  "intent": "PROFILE_SHARE",
  "metaData": {
```

4.3.3 Profile on-share

This API will be invoked by HIP to acknowledge the request by the user/patient to share the profile details.

URL: /api/hiecm/patient-share/v3/on-share

Method: Post

Request Headers:

Property Name	Example Value	Required	Description
REQUEST-ID	18235d89-cb13-479d-ad71-7a57d5f669a8	Yes	Unique UUID for track the end to end request transaction
TIMESTAMP	2022-10-06T10:10:00.587Z	Yes	Actual time when request was initiated, ISO 8601 represents date and time by starting with the year, followed by the month, the day, the hour, the minutes, seconds and milliseconds

Authorization	eyJhbGciOiJSUzUxMiJ9. eyJzdWIiOiJ2YXNhbnRoYWt1bWFyLmtlc2F2 YW5Ac2J4IiwiY2xpZW50SWQiOiJzYngiLCJzeXN0ZW0iOiJBQkhBLUEiLCJyZXF1ZXN0ZXJJZCI6IlBIUi1XRUIiLCJwaHJNb2JpbGUiOm51bGwsImV4cCI6MTY2NzI5ODExNSwiaWF0IjoxNjY3MjkwOTE1LCJwaHJBZGRyZXNzIjoidmFzYW50aGFrdW1hci5rZXNhdmFuQHNieCIsInR4bklkIjoiYjEwMGM4ZDMtNTE1ZC00YWFiLTg1OWQtYzNlMTUwOTE3ZGY1In0	Yes	JWT Access token which was issued by ABDM session API after successful validation of client id and secret
X-CM-ID	sbx	Yes	Suffix of the consent manager to which the request was intended

Body Parameters

Property Name	Example Value	Required	Description
abhaAddress	ABHA address	Yes	Patient ABHA address against which the health records needs to be linked
status	“SUCCESS”	Yes	Transaction status from HIP to HIE-CM, “success” “failed”
context	43	Yes	HMIS/LMIS Counter ID
tokenNumber	3	Yes	Token number at HMIS/LMIS to be provided to the patient
expiry	180	Yes	Patient year of birth
requestId	f29f0e59-8388-46989fe605db67aeac46	Yes	This is a key value pair which contains the purpose

Request Body

Request Body:


```
{
  "acknowledgement": {
    "abhaAddress": "abc@abdm",
    "status": "success",
    "profile": {
      "context": "43",
      "tokenNumber": "3",
      "expiry": "180"
    }
  },
  "response": {
    "requestId": "f29f0e59-8388-4698-9fe6-05db67aeac46"
  }
}
```


Response

Response:

Code : 200 OK

Request Body : ERROR

-> Use this in case of error response (Ex: This is the one example for error payload and the code will be same. But, message will be change each error).

Request Body:


```
{
 "error": {
  "code": "ABDM-9999: ",
  "message": "string"
 },
 "response": {
  "requestId": "6f0b4665-a915-4c92-aa36-65afb4a2cd71"
 }
}
```


4.3.4 Profile on share – Callback

This is a callback API for patient on-share API.

URL: {callback_url}/api/v3/hiu/patient/on-share

Method: Post

Request Headers:

Property Name	Example Value	Required	Description
REQUEST-ID	18235d89-cb13-479d-ad717a57d5f669a8	Yes	Unique UUID for track the end to end request transaction
TIMESTAMP	2022-10-06T10:10:00.587Z	Yes	Actual time when request was initiated, ISO 8601 represents date and time by starting with the year, followed by the month, the day, the hour, the minutes, seconds and milliseconds
X-HIU-ID	ABDM_sbx	Yes	Suffix of the HIU to which the request was intended

Body Parameters:

Property Name	Example Value	Required	Description
abhaAddress	ABHA address	Yes	Patient ABHA address against which the health records needs to be linked
Status	"success"	Yes	Trasaction status from HIP to HIE-CM, "success" "failed"
Context	43	Yes	HMIS/LMIS Counter ID
tokenNumber	3	Yes	Token number at HMIS/LMIS to be provided to the patient
Expiry	180	Yes	Patient year of birth
requestId	f29f0e59-8388-46989fe605db67aeac46	Yes	This is a key value pair which contains the purpose

Request Body

Request Body:

```
  "acknowledgement": {
    "abhaAddress": "abc@abdm",
    "status": "success",
    "context": "43",
    "tokenNumber": "3",
    "expiry": 180
  },
  "response": {
    "requestId": "f29f0e59-8388-4698-9fe6-05db67aeac46"
  }
}
```


Response

Response:
Code: 200 OK

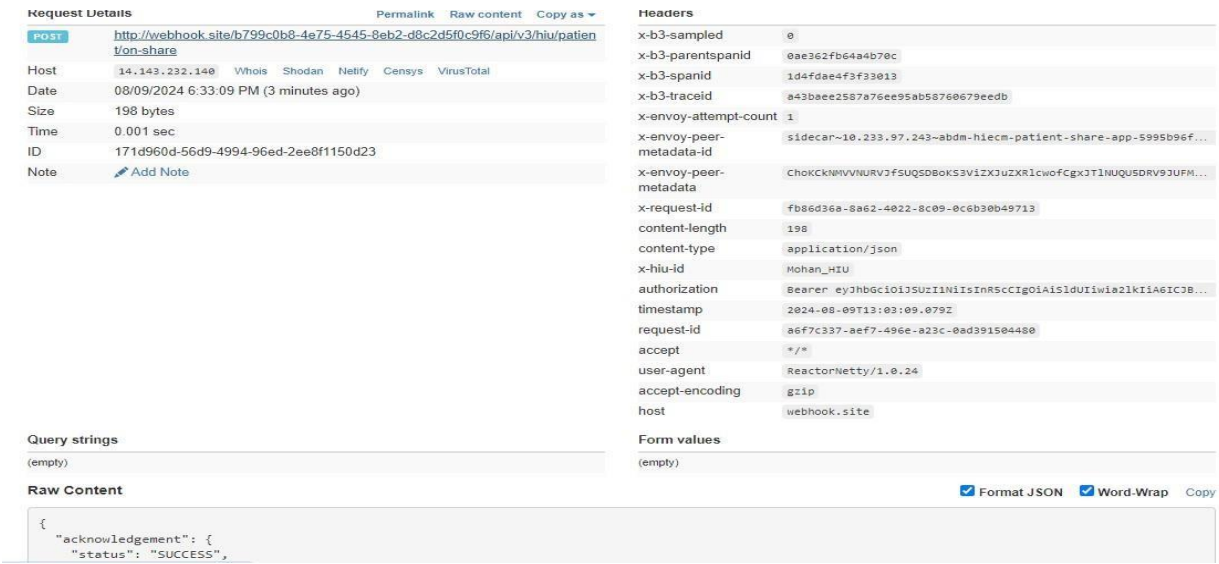

4.4 Scan and Record Share

4.4.1 Overview

- The User/Patient can share his/her basic KYC information with the HMIS/LIMS by scanning the QR Code using the integrator application (Example: ABHA App), which enables them to complete the seamless profile share during their visit.
- The authenticity of the profile information is verified by the HIE-CM internally before sharing with the HMIS/LIMS.

4.4.2 Sequence Diagram

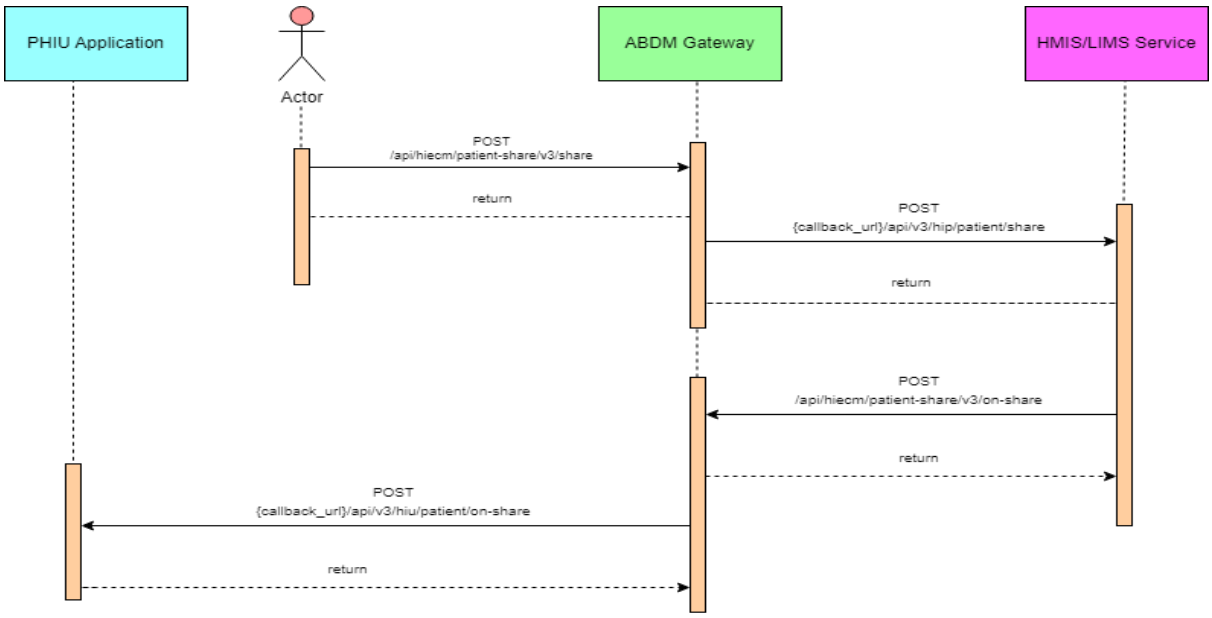

ABDM - HIE-CM - Patient Share Sequence Diagram

4.4.3 Record share

This API will be invoked from the integrator application (any PHR application, just like ABHA) to share the user/patient record with HMIS/LIMS.

URL: /api/hiecm/patient-share/v3/share **Method:**
Post **Request Headers:**

Property Name	Example Value	Required	Description
REQUEST-ID	18235d89-cb13-479d-ad71-7a57d5f669a8	Yes	Unique UUID for track the end to end request transaction
TIMESTAMP	2022-10-06T10:10:00.587Z	Yes	Actual time when request was initiated, ISO 8601 represents date and

			time by starting with the year, followed by the month, the day, the hour, the minutes, seconds and milliseconds
Authorization	eyJhbGciOiJSUzUxMiJ9. eyJzdWIiOiJ2YXNhbnRoYWt1bWFyLmtlc 2F2 YW5Ac2J4IiwiY2xpZW50SWQiOiJz NhdmFuQHNieCIsInR4bklkIjoi YjEwMGM4ZDMtNTE1ZC00YWFiLTg1O WQtYzNlMTUwOTE3ZGY1In0	Yes	JWT Access token which was issued by ABDM session API after successful validation of client id and secret
X-CM-ID	sbx	Yes	Suffix of the consent manager to which the request was intended
X-Auth-TOKEN	eyJhbGciOiJSUzUxMiJ9. _gutl1XW9CaBaZSah7GOxGRr4gpSIJJv ILWovwG58DyNzEhrHtAfIje_pegqRsNM OFI-xPYJd2x6CcDKSoAXvXO0jbuoOvlPl5kh plOKU-WcFeWA	Yes	JWT Access token which was issued by IDP service after successfully user authentication
X-HIU-ID	HIU_ID	Yes	Identifier of the health information user to which the request was intended

Body Parameters

Property Name	Example Value	Required	Description
Intent	RECORD_SHARE	Yes	This is a key value pair which contains the purpose with following possible values. Profile_share Payment Health_record_sharing

metadata	{ "hipId": "Test_HIP", "context": "ABC123", "hprId": "XXXXXX@abdm", "latitude": "-38.679", "longitude": "58.498" }	Yes	This is a key value pair which contains the location longitude and latitude. hipId:- healthInformationProviderId context:- counterCode hprId:- healthprofessionalregisterId
healthInfo Bundle	{ "content": "eyJhbGciOiJSUzUxMiJ9-KCAiC5GZd3aPROr 5WtlyQ-Csz2N0taGCOMNjrd5JTbbayA", "media": "Json", "checkSum": "abcdefg12", "careContextReference": "Blood test" }	Yes	Patient health record to be shared.

Request Body

Request Body

```
{
  "intent" : "RECORD_SHARE" ,
  "metaData" : {
    "hipId" : "HIP_ID" ,
    "context" : "ABC123" ,
    "hprId" : "abdulkalam@abdm" ,
    "latitude" : "-37.519 ",
    "longitude" : "58.498"
  },
    "profile": {
        "patient": {
      "abhaNumber": 9117838615XXXX,
      "abhaAddress": "91178XXX@sbx",
      "name": "User 1",
      "gender": "M",
      "dayOfBirth": "XX",
      "monthOfBirth": "XX",
      "yearOfBirth": "XXXX",
      "address": {
        "line": "C/O Sandipan Kshirsagar Ambejogai Road Renuka Nagar",
        "district": null,
        "state": null,
        "pincode": null
      },
      "phoneNumber": "987654XXXX"
    }
  },
  "healthInfoBundle" : {
    "content" : "eyJhbGciOiJSUzUxMiJ9.eyJzdWIiOiIxODQ0MzgxMDgwNjQ0MEBh0EtAAibtzTS2yF -
Bq0_6fbIymHjv4_IpIcyU9aSFEC2VYgHxuoGEFC5FEje8 -FAua8
FMrWAsTwioxbGujqjvcM9OC1BUrRakmAVxk7GGfmF7jQC8wBxH -KCAiC5GZd3aPROr 5WtlyQ -
Csz2N0taGCOMNjrd5JTbbayA",
    "media" : "Json" ,
    "checkSum" : "abcdefg12" ,
    "careContextReference" : "Blood test"
  }
}
```


Response

Response:
Code : 202 Accepted

4.4.4 Record share - Callback

This is a callback API for patient share API.

URL: {callback_url}/api/v3/hip/patient/share

Method: Post

Request Headers:

Property Name	Example Value	Required	Description
REQUEST-ID	18235d89-cb13-479d-ad71-7a57d5f669a8	Yes	Unique UUID for track the end to end request transaction
TIMESTAMP	2022-10-06T10:10:00.587Z	Yes	Actual time when request was initiated, ISO 8601 represents date and time by starting with the year, followed by the month, the day, the hour, the minutes, seconds and milliseconds
Authorization	eyJhbGciOiJSUzUxMiJ9. eyJzdWIiOiJ2YXNhbnRoYWt1bWFyLmtlc 2F2 CJwaHJNb2JpbGUiOm51bGwsImV4c CI6MTY2NzI5ODExNSwia WF0IjoxNjY3MjkwOTE1LCJwaHJBZ	Yes	JWT Access token which was issued by ABDM session API after successful validation of client id and secret
X-CM-ID	sbx	Yes	Suffix of the consent manager to which the request was intended
X-HIP-ID	HIU_ID	Yes	Identifier of the health information provider to which the request was intended

Body Parameters

Property Name	Example Value	Required	Description

Intent	RECORD_SHARE	Yes	This is a key value pair which contains the purpose with following possible values. Profile_share Payment Health_record_sharing
metadata	{ "hipId": "Test_HIP", "counterId": "ABC123", "hprId": "abdulkalam@abdm", "latitude": "-38.679", "longitude": "58.498" }	Yes	This is a key value pair which contains the location longitude and latitude
healthInBundle	{ "content": "eyJhbGciOiJSUzUxMiJ9.eyJzdWIiOiIxODQ0MzgxMDgwNjQ0MEBhYmRtIiwiY -FAua8 5WtlyQ-Csz2N0taGCOMNjrd5JTbbayA", "media": "Json", "checkSum": "abcdefg12", "careContextReferen ce": "Blood test" }	Yes	Consists of the health information that must be shared with the HIP with encrypted care context content

Request Body

Request Body:

```
{
  "intent": "RECORD_SHARE",
  "metaData": {
    "hipId": "HIP_ID",
    "counterId": "ABC123",
    "hprId": "XXXXXXX@abdm",
```

```
    "latitude": "-37.519",
    "longitude": "58.498"
  },
  "healthInfoBundle": {
    "content": "eyJhbGciOiJSUzUxMiJ9.eyJzdWIiOiIxODQ0MzgxMDgwNjQ0MEBhYmRFAua8
            FMrWAsTwioxbGujqjvcM9OC1BUrRakmAVxk7GGfmF7jQC8wBxH-KCAiC5GZd3aPROr
5WtlyQCsz2N0taGCOMNjrd5JTbbayA",
    "media": "Json",
    "checkSum": "abcdefg12",
    "careContextReference": "Blood test"
  }
}
```


Response

Response:
Code: 202 Accepted

POST	http://webhook.site/b799c0b8-4e75-4545-8eb2-d8c2d5f0c9f6/api/v3/hip/patient/share
Host	14.143.232.140 Whois Shodan Netify Censys VirusTotal
Date	08/09/2024 7:18:52 PM (a minute ago)
Size	1.2 kB
Time	0.000 sec
ID	c07a5737-fc30-4dd4-97c5-9c77856a0f2b
Note	Add Note

x-b3-sampled	0
x-b3-parentspanid	3d7ffcfdd8f99292
x-b3-spanid	95a5e75b05ccc952
x-b3-traceid	4c2e9e65ab614d95064d62e1e241db06
x-envoy-attempt-count	1
x-envoy-peer-metadata-id	sidecar~10.233.97.243~abdm-hiecm-patient-share-app-5995b96f...
x-envoy-peer-metadata	ChoKCkNMVVNURVJfSUQSDBoKS3ViZXJuZXRlcwofCgxJTlNUQU5DRV9JUFM...
x-request-id	3e601795-b69f-440a-90f5-0b6175f5e6c6
content-length	1215
content-type	application/json
x-hip-id	Mohan_HIP
authorization	Bearer eyJhbGciOiJSUzI1NiIsInR5cCIgOiAiSldUIiwia2lkIiA6ICJB...
timestamp	2024-08-09T13:48:52.494Z
request-id	c3f281e4-5659-459d-8661-54bc322f2653
accept	*/*
user-agent	ReactorNetty/1.0.24
accept-encoding	gzip
host	webhook.site

Query strings

(empty)

Form values

(empty)

Raw Content Format JSON Word-Wrap Copy


```
{
  "intent": "RECORD_SHARE",
  "metaData": {
    "hipId": "Mohan_HIP",
    "context": "12",
```


4.4.5 Record on-share

This API will be invoked by HIP to acknowledge the request by the integrator application (any PHR application, just like ABHA) to share record.

URL: /api/hiecm/patient-share/v3/on-share

Method: POST

Request Headers:

Property Name	Example Value	Required	Description
REQUEST-ID	18235d89-cb13-479d-ad71-7a57d5f669a8	Yes	Unique UUID for track the end to end request transaction
TIMESTAMP	2022-10-06T10:10:00.587Z	Yes	Actual time when request was initiated, ISO Date time format represents date and time
Authorization	eyJhbGciOiJSUzUxMiJ9. eyJzdWIiOiJ2YXNhbnRoYWt1bWFyLmtlc 2F2 YW5Ac2J4IiwiY2xpZW50SWQiOiJz YngiLCJzeXN0ZW0iOiJBQkhBLUEiLCJy ZXF1ZXN0ZXJJZCI6IlBIUi1XRUIiL CJwaHJNb2JpbGUiOm51bGwsImV4c CI6MTY2NzI5ODExNSwia WF0IjoxNjY3MjkwOTE1LCJwaHJBZ GRyZXNzIjoidmFzYW50aGFrdW1hci5rZX NhdmFuQHNieCIsInR4bklkIjoi YjEwMGM4ZDMtNTE1ZC00YWFiLTg1O WQtYzNlMTUwOTE3ZGY1In0	Yes	JWT Access token which was issued by ABDM session API after successful validation of client id and secret
X-CM-ID	sbx	Yes	Suffix of the consent manager to which the request was intended

Body Parameters

Property Name	Example Value	Required	Description
abhaAddress	ABHA address	abhaAddress	ABHA address
Status	“success”	Status	“success”

healthInformation	{ "healthInformationReference": "123456" }	payment	{ "paymentReference": "abc" }
requestId	f29f0e59-8388-46989fe605db67aeac46	Yes	This is a key value pair which contains the purpose

Request Body

Request Body


```
{
  "acknowledgement": {
    "status": "SUCCESS",
    "abhaAddress": "XXXXXX@abdm",
    "healthInformation": {
      "healthInformationReference": "123456"
    }
  },
  "response": {
    "requestId": "ecf0cb2d-5178-40d3-85fa-14d25f6bdc0d"
  }
```


Response

Response:

Code: 202 ACCEPTED

4.4.6 Record on-share – Callback

This is a callback API for patient on-share.

URL: {callback_url}/api/v3/hiu/patient/on-share

Method: POST

Request Headers:

Property Name	Example Value	Required	Description
REQUEST-ID	18235d89-cb13-479d-ad71-7a57d5f669a8	Yes	Unique UUID for track the end to end request transaction
TIMESTAMP	2022-10-06T10:10:00.587Z	Yes	Actual time when request was initiated, ISO 8601 represents date and time by starting with the year, followed by the month, the day, the hour, the minutes, seconds and milliseconds
X-HIU-ID	ABDM_sbx	Yes	Suffix of the HIU to which the request was intended
Authorization	eyJhbGciOiJSUzUxMiJ9. eyJzdWIiOiJ2YXNhbnRoYWt1bWFyLmtlc2F2 YW5Ac2J4IiwiY2xpZW50SWQiOiJz YngiLCJzeXN0ZW0iOiJBQkhBLUEiLCJy ZXF1ZXN0ZXJJZCI6IlBIUi1XRUIiL CJwaHJNb2JpbGUiOm51bGwsImV4c CI6MTY2NzI5ODExNSwia WF0IjoxNjY3MjkwOTE1LCJwaHJBZ GRyZXNzIjoidmFzYW50aGFrdW1hci5rZX NhdmFuQHNieCIsInR4bklkIjoi YjEwMGM4ZDMtNTE1ZC00YWFiLTg1O WQtYzNlMTUwOTE3ZGY1In0	Yes	JWT Access token which was issued by ABDM session API after successful validation of client id and secret

Body parameters

Property Name	Example Value	Required	Description
abhaAddress	ABHA address	Yes	Patient ABHA address against which the health records needs to be linked
Status	“success”	Yes	Trasaction status from HIP to HIE-CM, “success” “failed”
healthInformationReference		Yes	

requestId	f29f0e59-8388-46989fe605db67aeac46	Yes	This is a key value pair which contains the purpose

Request Body

Request Body:


```
{
  "acknowledgement": {
    "status": "SUCCESS",
    "abhaAddress": "XXXXXXXX@abdm",
    "healthInformation": {
      "healthInformationReference": "123456"
    }
  },
  "response": {
    "requestId": "ecf0cb2d-5178-40d3-85fa-14d25f6bdc0d"
  }
}
```


Response

Response:

Code: 200 OK

POST	http://webhook.site/b799c0b8-4e75-4545-8eb2-d8c2d5f0c9f6/api/v3/hiu/patient/on-share
Host	14.143.232.140 Whois Shodan Netify Censys VirusTotal
Date	08/09/2024 7:19:39 PM (3 minutes ago)
Size	197 bytes
Time	0.000 sec
ID	306b409a-7776-41bf-8cea-734779631a87
Note	Add Note

x-b3-sampled	0
x-b3-parentspanid	41a2049f51f6d936
x-b3-spanid	0d0f6b6e75bb5b0a
x-b3-traceid	02e28c75788d9ed655c23c32d2c3f696
x-envoy-attempt-count	1
x-envoy-peer-metadata-id	sidecar~10.233.97.243~abdm-hiecm-patient-share-app-5995b96f...
x-envoy-peer-metadata	ChoKCkNMVVNURVJfSUQSDBoKS3ViZXJuZXRlcwofCgxJTlNUQU5DRV9JUFM...
x-request-id	0997643d-16be-4f98-a0e6-6559f33307cf
content-length	197
content-type	application/json
x-hiu-id	Mohan_HIU
authorization	Bearer eyJhbGciOiJSUzI1NiIsInR5cCIgOiAiSldUIiwia2lkIiA6ICJB...
timestamp	2024-08-09T13:49:37.399Z
request-id	a9330e44-8afd-4d43-a860-2e6750b27d05
accept	*/*
user-agent	ReactorNetty/1.0.24
accept-encoding	gzip
host	webhook.site

Query strings

(empty)

Form values

(empty)

Raw Content Format JSON Word-Wrap Copy


```
{
  "acknowledgement": {
    "status": "SUCCESS",
    "abhaAddress": "vignesh_1992@sbx",
    "healthInformation": {
```

4.5 Scan and Pay

4.5.1 Overview

The User/Patient can share his/her basic KYC information with the HMIS/LIMS by scanning the QR Code using the integrator application (Example: ABHA App), which enables them to complete the seamless profile share during their visit.

The authenticity of the profile information is verified by the HIE-CM internally before sharing with the HMIS/LIMS.

4.5.2 Sequence Diagram

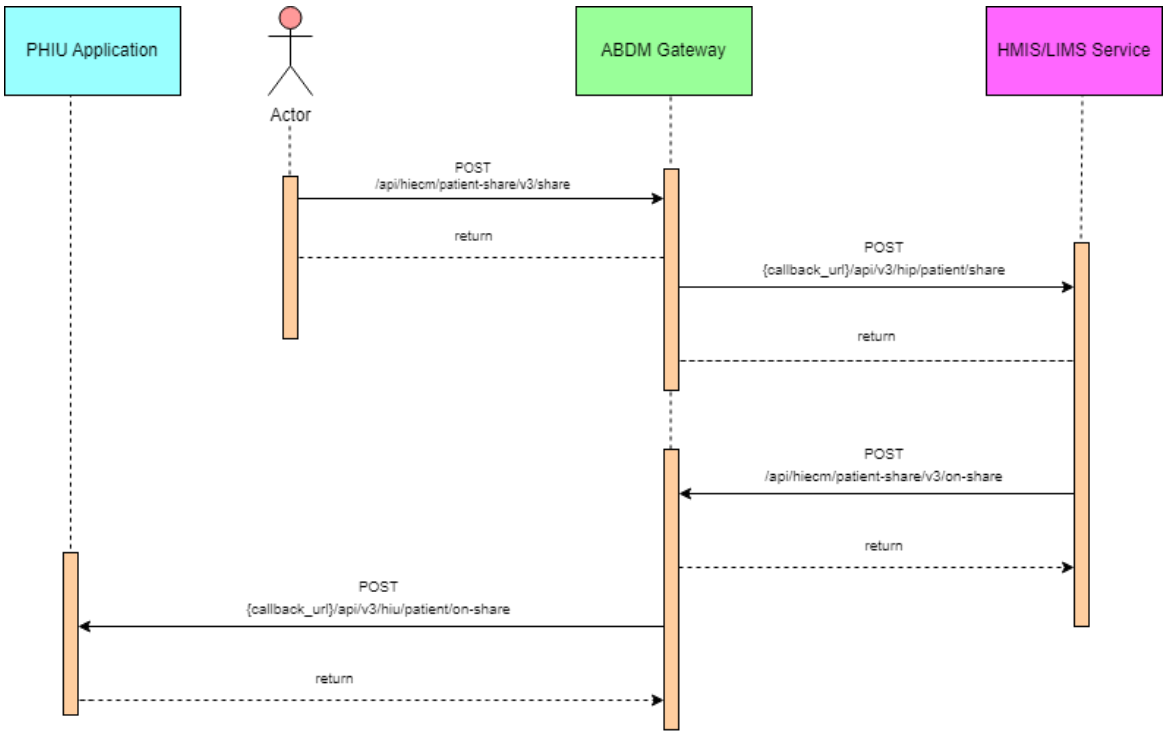

ABDM - HIE-CM - Patient Share Sequence Diagram

4.5.3 List of APIs

4.5.3.1 Payment share

This API will be invoked from the integrator application (any PHR application, just like ABHA) to share the user/patient payment details with HMIS/LIMS.

URL: /api/hiecm/patient-share/v3/share

Method: Post

Request Headers:

Property Name	Example Value	Required	Description
REQUEST-ID	18235d89-cb13-479d-ad71-7a57d5f669a8	Yes	Unique UUID for track the end to end request transaction
TIMESTAMP	2022-10-06T10:10:00.587Z	Yes	Actual time when request was
			initiated, ISO Date time format represents date and time
Authorization	eyJhbGciOiJSUzUxMiJ9. eyJzdWIiOiJ2YXNhbnRoYWt1bWFyLmtlc 2F2 YW5Ac2J4IiwiY2xpZW50SWQiOiJz YngiLCJzeXN0ZW0iOiJBQkhBLUEiLCJy ZXF1ZXN0ZXJJZCI6IlBIUi1XRUIiL CJwaHJNb2JpbGUiOm51bGwsImV4c CI6MTY2NzI5ODExNSwia WF0IjoxNjY3MjkwOTE1LCJwaHJBZ GRyZXNzIjoidmFzYW50aGFrdW1hci5rZX NhdmFuQHNieCIsInR4bklkIjoi YjEwMGM4ZDMtNTE1ZC00YWFiLTg1O WQtYzNlMTUwOTE3ZGY1In0	Yes	JWT Access token which was issued by ABDM session API after successful validation of client id and secret
X-HIU-ID	HIU_ID	Yes	Identifier of the health information user to which the request was intended
X-CM-ID	sbx	Yes	Suffix of the consent manager to which the request was intended
X-AUTH-TOKEN	eyJhbGciOiJSUzUxMiJ9.eyJzdWIiOiJna XJpamFAc2J4IiwiY2xpZW50SWQiOiJQS FItV0VCIiwicmVxdWVzdGVySWQiOiJrX 2hpcCIsInN5c3RlbSI6IkFCRE0iLCJtb2Jp bGUiOiI4MjgxMTQ3MDgwIiwiZXhwIjoxNj c3NjY5NDU1LCJpYXQiOjE2Nzc2NjIyNT WcFeWA	Yes	JWT Access token which was issued by IDP service after successfully user authentication

Body Parameters

Property Name	Example Value	Required	Description
Intent	"PAYMENT_SHARE"	Yes	This is a key value pair which contains the purpose with following possible values. Profile_share Payment Health_record_sharing
metadata	{ "hipId": "Test_HIP", "counterId": "ABC123", "hprId": "abdulkalam@abdm", "latitude": "-38.679",	Yes	This is a key value pair which contains the location longitude and latitude. hipId:- healthInformationProviderId context:- counterCode hprId:- healthprofessionalregisterId
	"longitude": "58.498" }		

paymentBundle	{
	"upiAddress": "upi@gmail.com",
	"orderNo": "123",
	"amount": 1100.123,
	"merchantId": "LGKYL67895#567y",
	"description": "Testt"
	
	}
		Yes	Consists of payment information such as the upi address, payment amount, order details and the merchant information

Request Body

Request Body:

```
{
  "intent": "payment_share",
  "metaData": {
    "hipId": "HIP_ID",
    "counterId": "ABC123",
    "hprId": "XXXXX@abdm",
    "latitude": "-37.519",
    "longitude": "58.494"
  },
  "profile": {
    "patient": {
      "abhaNumber": {{abha-number}},
      "abhaAddress": "{{abha-address}}",
      "name": "User 1",
      "gender": "M",
      "dayOfBirth": "XX",
      "monthOfBirth": "XX",
      "yearOfBirth": "XXXX",
      "address": {
        "line": "C/O Sandipan Kshirsagar Ambejogai Road Renuka Nagar",
        "district": null,
        "state": null,
        "pincode": null
      },
      "phoneNumber": "9876543210"
    }
  },
  "paymentBundle": {
    "upiAddress": "upi@gmail.com",
    "orderNo": "123",
    "amount": 1100.123,
    "merchantId": "LGKYL67895#567y",
    "description": "Testt"
  }
}
```

Response

Response:
Code: 202 ACCEPTED

4.5.3.2 Payment share – Callback

This is a callback API for payment share.

URL: {callback_url}/api/v3/hip/patient/share

Method: POST

Request Headers:

Property Name	Example Value	Required	Description
REQUEST-ID	18235d89-cb13-479d-ad71-7a57d5f669a8	Yes	Unique UUID for track the end to end request transaction
TIMESTAMP	2022-10-06T10:10:00.587Z	Yes	Actual time when request was initiated, ISO 8601 represents date and time by starting with the year, followed by the month, the day, the hour, the minutes, seconds and milliseconds
X-HIP-ID	IN2810014366	Yes	Identifier of the health information provider to which the request was intended
Authorization	eyJhbGciOiJSUzUxMiJ9. eyJzdWIiOiJ2YXNhbnRoYWt1bWFyLmtlc2F2 YW5Ac2J4IiwiY2xpZW50SWQiOiJz YngiLCJzeXN0ZW0iOiJBQkhBLUEiLCJy ZXF1ZXN0ZXJJZCI6IlBIUi1XRUIiL CJwaHJNb2JpbGUiOm51bGwsImV4c CI6MTY2NzI5ODExNSwia WF0IjoxNjY3MjkwOTE1LCJwaHJBZ GRyZXNzIjoidmFzYW50aGFrdW1hci5rZX NhdmFuQHNieCIsInR4bklkIjoi YjEwMGM4ZDMtNTE1ZC00YWFiLTg1O WQtYzNlMTUwOTE3ZGY1In0	Yes	JWT Access token which was issued by ABDM session API after successful validation of client id and secret

Body parameters

Property Name	Example Value	Required	Description

Intent	{
	“purpose”: “profile_share”,
	“hip_id”: “ABDM_HIP”,
	"context”: “43”
	}
		Yes	This is a key value pair which contains the purpose

metadata	{ lat: 20.5937, long: 78.9629 }	Yes	This is a key value pair which contains the location longitude and latitude. hipId:- healthInformationProviderId context:- counterCode hprId:- healthprofessionalregisterId
paymentBundle	{ "upiAddress": "upi@gmail.com", "orderNo": "123", "amount": 1100.123, "merchantId": "LGKYL67895#567y", "description": "Testt" }	Yes	Consists of payment information such as the upi address, payment amount, order details and the merchant information

Request Body

Request Body:

```
{
  "intent": "payment_share",
  "metaData": {
    "hipId": "HIP_ID",
    "counterId": "ABC123",
    "hprId": "XXXXXXXX@abdm",
    "latitude": "-37.519",
    "longitude": "58.494"
  },
  "profile": {
    "patient": {
      "abhaNumber": {{abha-number}},
      "abhaAddress": "{{abha-address}}",
      "name": "User 1",
      "gender": "M",
      "dayOfBirth": "XX",
      "monthOfBirth": "XX",
      "yearOfBirth": "XXXX",
      "address": {
        "line": "C/O Sandipan Kshirsagar Ambejogai Road XXXXXX",
```

```
            "district": null,
            "state": null,
            "pincode": null
          },
          "phoneNumber": "987654XXXX"
        }
      },
      "paymentBundle": {
        "upiAddress": "upi@gmail.com",
        "orderNo": "123",
        "amount": 1100.123,
        "merchantId": "LGKYL67895#567y",
        "description": "Testt"
      }
    }
```


Response

Response:
Code: 200 OK

POST	http://webhook.site/b799c0b8-4e75-4545-8eb2-d8c2d5f0c9f6/api/v3/hip/pati...
Host	14.143.232.140 Whois Shodan Netify Censys VirusTotal
Date	08/09/2024 7:40:22 PM (a minute ago)
Size	618 bytes
Time	0.000 sec
ID	683a8d68-3eb6-41df-b6ae-1e9d47486d6d
Note	Add Note

x-b3-sampled	0
x-b3-parentspanid	3115cf5f73a6880f
x-b3-spanid	4b54a93e448961d7
x-b3-traceid	0100f35ec8565ef3324117a21a14f5cc
x-envoy-attempt-count	1
x-envoy-peer-metadata-id	sidecar~10.233.97.243~abdm-hiecm-patient-share-app-5995b96f...
x-envoy-peer-metadata	ChoKCkNMVVNURVJfSUQSDBoKS3ViZXJuZXRlcwofCgxJTlNUQUSDRV9JUFM...
x-request-id	7b1cc87d-222b-403a-b2a8-0fda2078a3f2
content-length	618
content-type	application/json
x-hip-id	Mohan_HIP
authorization	Bearer eyJhbGciOiJSUzI1NiIsInR5cCIgOiAiSldUIiwia2lkIiA6ICJB...
timestamp	2024-08-09T14:10:21.455Z
request-id	6ee48d6d-0f55-49e0-ae58-9f9bdec8dc0b
accept	*/*
user-agent	ReactorNetty/1.0.24
accept-encoding	gzip
host	webhook.site

Query strings

(empty)

Form values

(empty)

Raw Content ☑ Format JSON ☑ Word-Wrap Copy


```
{
  "intent": "PAYMENT_SHARE",
  "metaData": {
    "hipId": "Mohan_HIP",
    "context": "55",
```

4.5.3.3 Payment on-share

This is an API called by HIP as a response to payment share API call.

URL: /api/hiecm/patient-share/v3/on-share
Method: POST
Request Headers:

Property Name	Example Value	Required	Description
REQUEST-ID	18235d89-cb13-479d-ad71-7a57d5f669a8	Yes	Unique UUID for track the end to end request transaction
TIMESTAMP	2022-10-06T10:10:00.587Z	Yes	Actual time when request was initiated, ISO Date time format represents date and time
Authorization	eyJhbGciOiJSUzUxMiJ9. eyJzdWIiOiJ2YXNhbnRoYWt1bWFyLmtlc2F2 YW5Ac2J4IiwiY2xpZW50SWQiOiJz YngiLCJzeXN0ZW0iOiJBQkhBLUEiLCJy ZXF1ZXN0ZXJJZCI6IlBIUi1XRUIiL CJwaHJNb2JpbGUiOm51bGwsImV4c CI6MTY2NzI5ODExNSwia WF0IjoxNjY3MjkwOTE1LCJwaHJBZ GRyZXNzIjoidmFzYW50aGFrdW1hci5rZX NhdmFuQHNieCIsInR4bklkIjoi YjEwMGM4ZDMtNTE1ZC00YWFiLTg1O WQtYzNlMTUwOTE3ZGY1In0	Yes	JWT Access token which was issued by ABDM session API after successful validation of client id and secret
X-CM-ID	sbx	Yes	Suffix of the consent manager to which the request was intended

Body Parameters

Property Name	Example Value	Required	Description
abhaAddress	ABHA address	Yes	Patient ABHA address against which the health records needs to be linked
status	“success”	Yes	Trasaction status from HIP to HIE-CM, “success” “failed”
payment	{ "acknowledgement": { "status": "SUCCESS", "abhaAddress": "XXXXXXXXX@abdm", "payment": { "paymentReference": "1234567" }	Yes	Success payment status
response	{ "requestId": "37ba8d92ef3c-4a2b-9d4ff25c9e50a23b" }	Yes	Request Id from the Share api

Request Body

Request Body:

```
{
  "acknowledgement": {
    "status": "SUCCESS",
    "abhaAddress": "XXXXXX@abdm",
    "payment": {
      "paymentReference": "abc"
    }
  },
  "response": {
    "requestId": "37ba8d92-ef3c-4a2b-9d4f-f25c9e50a23b"
  }
}
```

Response

Response:
Code: 202 ACCEPTED

4.5.3.4 Payment on-share – Callback

This is a callback API for patient on-share.

URL: {callback_url}/api/v3/hiu/patient/on-share
Method: POST
Request Headers:

Property Name	Example Value	Required	Description
Authorization	eyJhbGciOiJSUzUxMiJ9. eyJzdWIiOiJ2YXNhbnRoYWt1bWFyLmtlc2F2 YW5Ac2J4IiwiY2xpZW50SWQiOiJz YngiLCJzeXN0ZW0iOiJBQkhBLUEiLCJy ZXF1ZXN0ZXJJZCI6IlBIUi1XRUIiL CJwaHJNb2JpbGUiOm51bGwsImV4c CI6MTY2NzI5ODExNSwia WF0IjoxNjY3MjkwOTE1LCJwaHJBZ GRyZXNzIjoidmFzYW50aGFrdW1hci5rZX NhdmFuQHNieCIsInR4bklkIjoi YjEwMGM4ZDMtNTE1ZC00YWFiLTg1O WQtYzNlMTUwOTE3ZGY1In0	Yes	JWT Access token which was issued by ABDM session API after successful validation of client id and secret
REQUEST-ID	18235d89-cb13-479d-ad71-7a57d5f669a8	Yes	Unique UUID for track the end to end request transaction
TIMESTAMP	2022-10-06T10:10:00.587Z	Yes	Actual time when request was initiated, ISO 8601 represents date and time by starting with the year, followed by the month, the day, the hour, the minutes, seconds and milliseconds

X-HIU-ID	ABDM_sbx	Yes	Suffix of the HIU to which the request was intended

Body parameters

Property Name	Example Value	Required	Description
abhaAddress	ABHA address	Yes	Patient ABHA address against which the health records need to be linked
Status	"success"	Yes	Trasaction status from HIP to HIE-CM, "success" "failed"

Payment	{
	"acknowledgement": {
	"status": "SUCCESS",
	"abhaAddress": "XXXXXXX@abdm",
	"payment": {
	"paymentReference": "1234567"
	}
		Yes	Payment status

Response	{
	"requestId": "37ba8d92-ef3c-4a2b-9d4f-f25c9e50a23b"
	}
		Yes	Request Id from the share api

Request Body

Request Body:

```
{
  "acknowledgement": {
    "status": "SUCCESS",
    "abhaAddress": "XXXXXXX@abdm",
    "payment": {
      "paymentReference": "abc"
    }
  },
 "response": {
    "requestId": "37ba8d92-ef3c-4a2b-9d4f-f25c9e50a23b"
  }
}
```


Response

Response:
Code: 200 OK

POST	http://webhook.site/b799c0b8-4e75-4545-8eb2-d8c2d5f0c9f6/api/v3/hiu/patient/on-share
Host	14.143.232.140 Whois Shodan Netify Censys VirusTotal
Date	08/09/2024 7:40:49 PM (a minute ago)
Size	178 bytes
Time	0.000 sec
ID	45faf8ba-e804-4128-a1df-dbe7bfced922
Note	Add Note

x-b3-sampled	0
x-b3-parentspanid	35d8a60776786bb8
x-b3-spanid	c84bcc79e637d697
x-b3-traceid	fd282dbe839c08eef17e95fde6b2c7e5
x-envoy-attempt-count	1
x-envoy-peer-metadata-id	sidecar~10.233.97.243~abdm-hiecm-patient-share-app-5995b96f...
x-envoy-peer-metadata	ChoKCkNMVVNURVJfSUQSDBoKS3ViZXJuZXRlcwofCgxJTlNUQU5DRV9JUFM...
x-request-id	68dcfd14-67c0-4cf5-803e-dfc8acd67d2a
content-length	178
content-type	application/json
x-hiu-id	Mohan_HIU
authorization	Bearer eyJhbGciOiJSUzI1NiIsInR5cCIgOiAiSldUIiwia2lkIiA6ICJB...
timestamp	2024-08-09T14:10:47.815Z
request-id	2ca504e5-a43a-4f13-b7b8-03c6881beec0
accept	*/*
user-agent	ReactorNetty/1.0.24
accept-encoding	gzip
host	webhook.site

Query strings

(empty)

Form values

(empty)

Raw Content Format JSON Word-Wrap Copy


```
{
  "acknowledgement": {
    "status": "SUCCESS",
    "abhaAddress": "vignesh_1992@sbx",
    "payment": {
```

5 Error Codes Listing

Code	Error
ABDM-1000	Unable to connect the database
ABDM-1001	No data found
ABDM-1002	Integrity violation
ABDM-1003	Email Gateway is unavailable
ABDM-1004	SMS Gateway is unavailable
ABDM-1005	Invalid receiver
ABDM-1006	Bad Request, invalid request Body
ABDM-1007	Connection failed due to timeout
ABDM-1008	SMS service currently disabled
ABDM-1009	Email service currently disabled
ABDM-1010	Validation failed
ABDM-1011	Gateway database unavailable
ABDM-1012	No records found against the ABHA Address
ABDM-1013	Invalid ABHA Number
ABDM-1014	Invalid Mobile Email
ABDM-1015	Invalid Response
ABDM-1016	Invalid TimeStamp
ABDM-1017	Invalid TransactionId
ABDM-1018	Share Profile database unavailable
ABDM-1019	Dependent Service Unavailable
ABDM-1020	Unknown database
ABDM-1021	Lack of required priviledges
ABDM-1022	Too many requests
ABDM-1023	Invalid User
ABDM-1024	Dependent service unavailable
ABDM-1025	Invalid ServiceId
ABDM-1026	Invalid Link Token
ABDM-1027	You are blocked. Please try again after 24 hours.
ABDM-1028	HIP is unavailable
ABDM-1029	Redis server is unavailable
ABDM-1030	Invalid request ID
ABDM-1031	Invalid request
ABDM-1032	Invalid header
ABDM-1033	HIU is unavailable

ABDM-1034	Notification service unavailable
ABDM-1035	Invalid HIP ID
ABDM-1035	OTP does not matched
ABDM-1036	Data does not matched
ABDM-1037	Counter and Care context count mismatch
ABDM-1038	ABHA address and Link token mismatch
ABDM-1039	Invalid Consent request id
ABDM-1040	Invalid HIU ID
ABDM-1041	Invalid Acknowledgement
ABDM-1042	Provider Mandatory
ABDM-1043	ABHA Address does not match with KYC details.
ABDM-1044	Broadcast Failed
ABDM-1045	Database Access is restricted
ABDM-1046	Invalid Purpose
ABDM-1047	Purpose does not exist
ABDM-1048	Timeout
ABDM-1049	Invalid Profile Share Intent Keys
ABDM-1050	Invalid Profile Share Metadata Keys
ABDM-1051	Invalid ABHA Number or ABHA Address
ABDM-1052	Invalid TransactionId or response's requestId
ABDM-1053	Data already exists
ABDM-1054	Invalid Subscription Request Id
ABDM-1401	HIP is not available
ABDM-1402	Acknowledgement is not received from HIP
ABDM-9999	Unknown exception
ABDM-1061	Consent artefact expired
ABDM-1062	Consent Not granted
ABDM-1063	Date Range given is invalid
ABDM-1064	request with this request id already exists
ABDM-1017	Invalid TransactionId
ABDM-1109	ABHA DB service unavailable
ABDM-1108	Notification DB service unavailable
ABDM-1205	Document DB Gateway is unavailable
ABDM-1034	Notification service unavailable
ABDM-1029	Redis server is unavailable
ABDM-1202	Document Gateway is unavailable
ABDM-1200	LGD Gateway is unavailable

ABDM-1201	IDP Gateway is unavailable
ABDM-9999	Unknown exception
ABDM-1101	This ABHA Address already exists. Please create with unique ABHA Address
ABDM-1006	Invalid combinations of scopes
ABDM-1100	You have requested multiple OTPs Or Exceeded maximum number of attempts for OTP match in this transaction. Please try again in 30 minutes.
ABDM-1006	Bad Request, invalid request Body